160 Series

Deltrol CONTROLS

160

165

RoHS Compliant

160 Series 5 And 13 Amp General Purpose Plug-in Relay

General purpose relay that controls electrical loads

Features

- Class F Coil Insulation System for 155° C Total Temperature
- Coil Molded in Rynite® PET for environmental protection
- Unique armature stop maintains adjustment
- Fine wire gauge coils are skeined for integrity

Typical Applications

- Industrial Machine Control
- Energy Management Systems
- Control Panels

Models

160: 5 Amp Open Frame
161: 13 Amp Open Frame
165: 5 Amp Covered Plug-in
166: 13 Amp Covered Plug-in
165F: 5 Amp Flanged Cover w/QC Terminals
166F: 13 Amp Flanged Cover w/QC Terminals
166E: Addition of Blowout Magnets - For Higher DC Ratings
Other Suffixes Available: A-Indicator Lamp, P-Printed Circuit Terminals, TM-Top Mounted Cover

Contact Data	
Configuration	Thru 3PDT
Materials	5 Amp: 1/8" Diameter Moveable Fine Silver | 3/16" Diameter Stationary Fine Silver 13 Amp: 3/16" Diameter Moveable Silver Cadmium Oxide | 3/16" Diameter Stationary Fine Silver Gold Flash is Standard on all Contacts Gold Diffused Available on Special Order - Min. Qty. Req'd

Contact Ratings

Model	Pole Configuration	UL Ratings*
160/165	Thru 3PDT	5 Amp or 1/8 HP at 120 VAC 5 Amp or 1/4 HP at 277 VAC 2 Amp at 600 VAC 5 Amp at 28 VDC
161/166	Thru 3PDT	13 Amp or 1/3 HP at 120 VAC 13 Amp or 1/2 HP at 277 VAC* 10 Amp at 28 VDC 1 HP at 277 VAC - 3 phase 3 Amp or 3/4 HP at 600 VAC 12 FLA, 35 LRA at 15 VAC
166E (w/ Blowout Magnet)	Thru DPDT	3 Amp at 150 VDC 30,000 cycles
	Form X, Y, W, and Z	10 Amp at 150 VDC 100,000 cycles

Expected Life	Electrical at Rated Load (Min) 100,000 Operations | Mechanical Life 10,000,000 Operations
Dielectric Strength	800 VRMS, 60 Hz Between Contacts 2200 VRMS, 60 Hz Between Other Elements
Agency Approvals	UL Recognized File No. E37066

*3 Pole devices rate at 6-2/3 Amp when switching greater than 150 VAC, unless polarity is the same on all poles

All dimensions in Inches

Rynite® is a registered trademark of DuPont

Pneutrol International Limited

UK Office
5 Caulside Drive, Antrim, BT41 2DU
United Kingdom
TEL: +44 (0) 28 9448 1800
www.pneutrol.com/industrialspares

sales@pneutrol.com

European Office
Unit 6, Saint Anthony's Business Park, Ballymount Road, D22 VW95
Ireland
TEL: +353 (0) 1 4373653
www.pneutrol.com/industrialspares

160 Series

Deltrol CONTROLS

Coil Data			
	Nominal Voltage	**Resistance In Ohms ± 10%**	**Nominal Coil Power**
AC Coils Single Pole Units	6 VAC 12 VAC 24 VAC 48 VAC 120 VAC 240 VAC	5. 20 80 315 2025 8000	2.0 VA
AC Coils 2 & 3 Pole Units	6 VAC 12 VAC 24 VAC 48 VAC 120 VAC 240 VAC	4.5 18 72 285 1850 7200	2.2 VA
DC Coils 1-3 Pole Units	6 VDC 12 VDC 24 VDC 48 VDC 110 VDC	30 120 480 1850 10,000	1.2 W
Coil Voltages	AC: Up to 277 Volts/60 Hz | DC: Up to 125 Volts		
Coil Treatment	Molded Rynite® PET Std. Class F		
Insulation Resistance	100 Megohms Minimum		
UL Insulation System File No.	E74443 S155D 155°C Total Temperature Std. (Covers S105 Class A and S130D Class B Requirements)		
Operate Data			
Pick Up (at 25°C)	AC Volts 85% or Less of Nominal | DC Volts 75% or Less of Nominal		
Operate Time	Approx. 15 Milliseconds		
Release Time	Approx. 15 Milliseconds		
Environmental Data			
Operating Ambient	AC: -45° to 55° | DC: -45° to 70°C		
Coil Temperature Rise	(25°C Ambient - Continuous Duty) AC: 45°C Approx. @ 60Hz - Use at 50 Hz will cause slight increase in Coil Rise DC: 25°C Approx.		
Mechanical Data			
Terminals	All Versions (Except P suffix) .187" x .020 Quick Connect/Solder | P suffix version Printed Circuit Pins		
Cover	Clear Polycarbonate - Flammability Rating 94V2		
Weight	All Versions Approx. 3.0 oz. (85 g)		

Pneutrol International Limited

UK Office
5 Caulside Drive, Antrim, BT41 2DU
United Kingdom
TEL: +44 (0) 28 9448 1800
www.pneutrol.com/industrialspares

sales@pneutrol.com

European Office
Unit 6, Saint Anthony's Business Park, Ballymount Road, D22 VW95
Ireland
TEL: +353 (0) 1 4373653
www.pneutrol.com/industrialspares

160 Series

Dimensional View

For Reference Only

Units: Inches [mm]

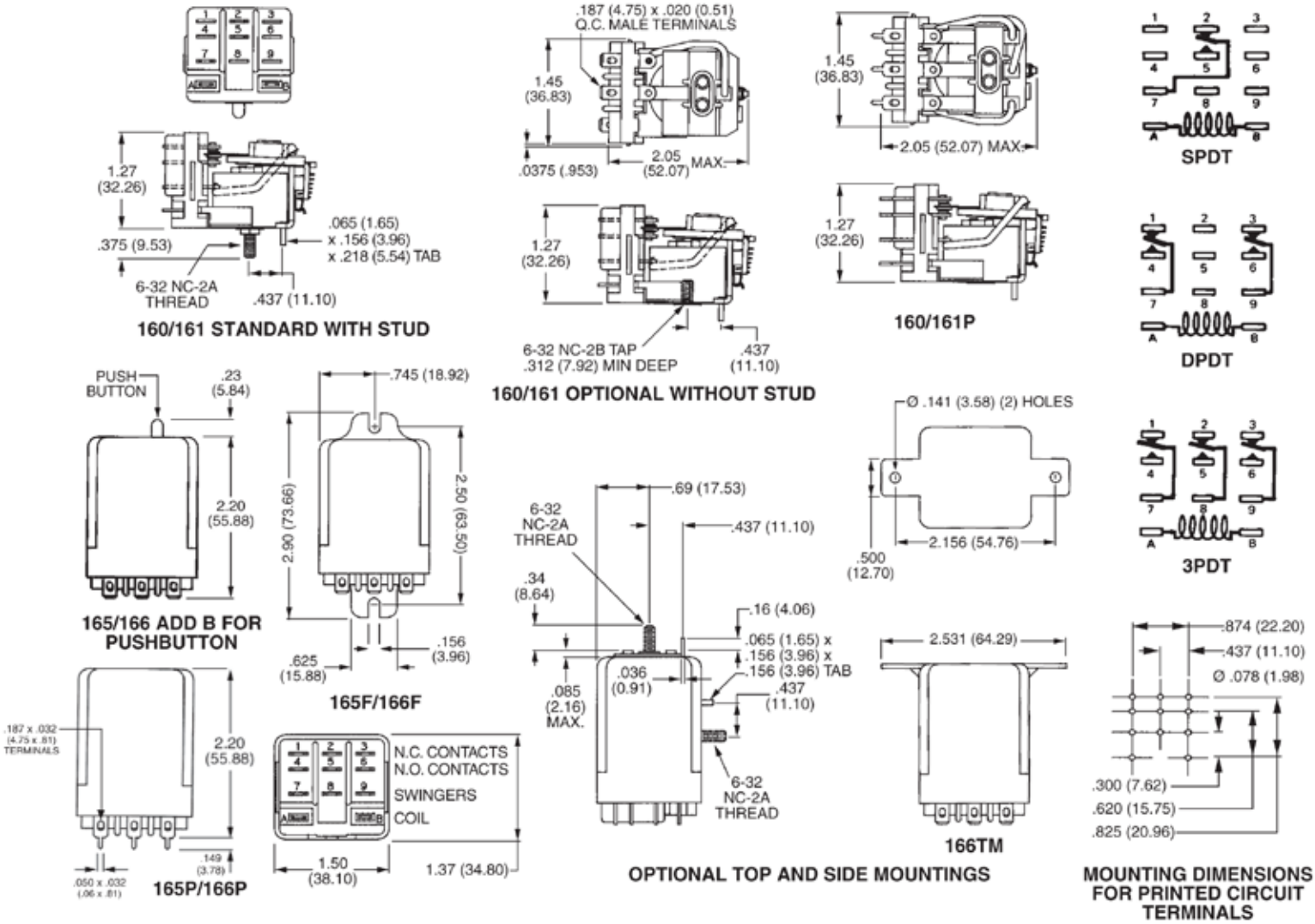

Schematics

Pneutrol International Limited

UK Office
5 Caulside Drive, Antrim, BT41 2DU
United Kingdom
TEL: +44 (0) 28 9448 1800
www.pneutrol.com/industrialspares

sales@pneutrol.com

European Office
Unit 6, Saint Anthony's Business Park, Ballymount Road, D22 VW95
Ireland
TEL: +353 (0) 1 4373653
www.pneutrol.com/industrialspares

160 Series

Ordering Information

5 Amp Part Numbers

		AC Coils			DC Coils		
Model	**Pole Config.**	**24 VAC**	**120 VAC**	**240 VAC**	**12 VDC**	**24 VDC**	**110 VDC**
165	SPDT	20323-82	20323-84	20323-85	20326-81	20326-82	20326-84
	DPDT	20324-82	20324-84	20324-85	20327-81	20327-82	20327-84
	3PDT	20325-82	20325-84*	20325-85	20328-81	20328-82	20328-84
165F	SPDT	20542-82	20542-84	20542-85	20548-81	20548-82	20548-84
	DPDT	20543-82	20543-84	20543-85	20549-81	20549-82	20549-84
	3PDT	20544-82	20544-84	20544-85	20550-81	20550-82	20550-84
13 Amp Part Numbers							
161	SPDT	20300-82	20300-84*	20300-85	20303-81	20303-82	20303-84
	DPDT	20301-82	20301-84*	20301-85	20304-81	20304-82	20304-84
	3PDT	20302-82	20302-84	20302-85	20305-81	20305-82	20305-84
166	SPDT	20306-82	20306-84	20306-85	20309-81	20309-82	20309-84
	DPDT	20307-82*	20307-84*	20307-85*	20310-81*	20310-82*	20310-84
	3PDT	20308-82*	20308-84*	20308-85*	20311-81*	20311-82*	20311-84*
166A	SPDT	20379-82	20379-83	20379-84	20382-81	20382-82	20382-83
	DPDT	20380-82	20380-83	20380-84	20383-81	20383-82	20383-83
	3PDT	20381-82*	20381-83*	20381-84	20384-81	20384-82	20384-83
166F	SPDT	20545-82	20545-84	20545-85	20551-81	20551-82	20551-84
	DPDT	20546-82*	20546-84*	20546-85	20552-81	20552-82	20552-84
	3PDT	20547-82*	20547-84*	20547-85	20553-81	20553-82	20553-84

(*) Normally Stocked
Non stocked items require a minimum order

Pneutrol International Limited

UK Office
5 Caulside Drive, Antrim, BT41 2DU
United Kingdom
TEL: +44 (0) 28 9448 1800
www.pneutrol.com/industrialspares

sales@pneutrol.com

European Office
Unit 6, Saint Anthony's Business Park, Ballymount Road, D22 VW95
Ireland
TEL: +353 (0) 1 4373653
www.pneutrol.com/industrialspares

160 Series

DIN Rail Mounting Sockets

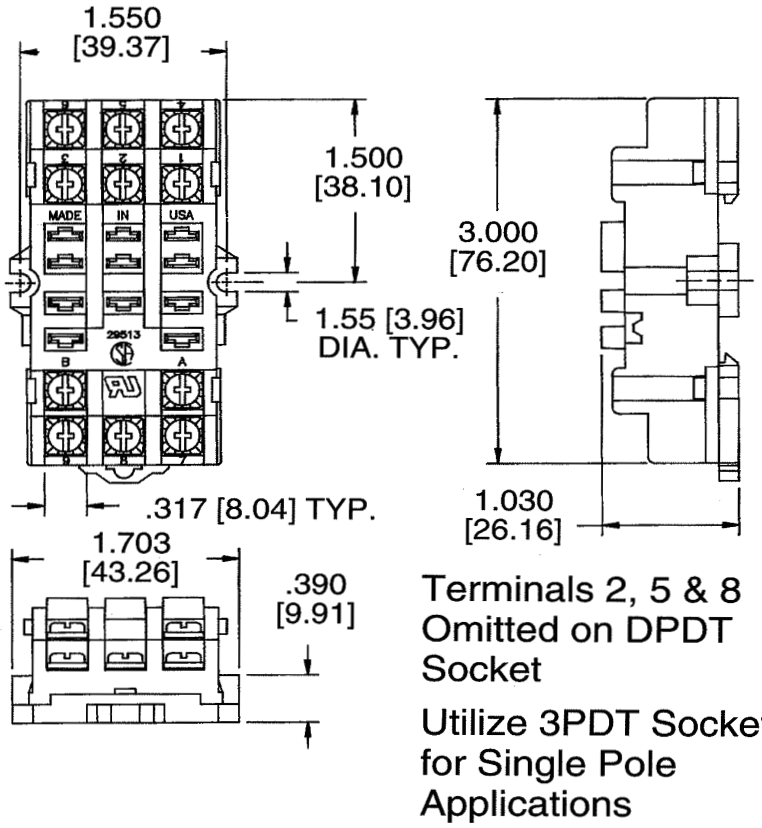

Terminals 2, 5 & 8 Omitted on DPDT Socket

Utilize 3PDT Socket for Single Pole Applications

Terminal Location

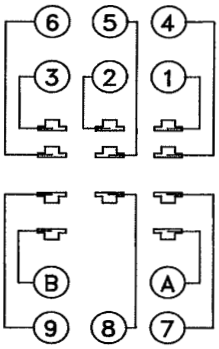

Top View

Part Number	Rating	Configuration	Description
20982-81	10 Amps at 300 VAC	DPDT	8 TERMINAL SOCKET

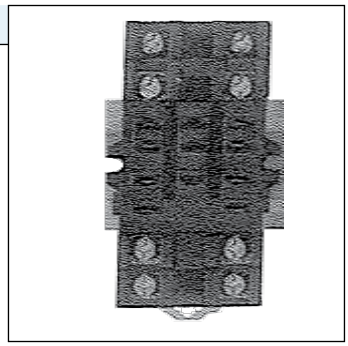

- Din Rail or surface mount
- Pressure clamp screws nickel plated 6-32
- UL Recognized File E66240
- CSA Certified File LR29513M36
- Accepts .187" Terminals

Part Number	Rating	Configuration	Description
20982-82*	10 Amps at 300 VAC	3PDT	11 TERMINAL SOCKET

- Din Rail or surface mount
- Pressure clamp screws nickel plated 6-32
- UL Recognized File #E66240
- CSA Certified File LR29513M36
- Accepts .187" Terminals

Pneutrol International Limited

UK Office
5 Caulside Drive, Antrim, BT41 2DU
United Kingdom
TEL: +44 (0) 28 9448 1800
www.pneutrol.com/industrialspares

sales@pneutrol.com

European Office
Unit 6, Saint Anthony's Business Park, Ballymount Road, D22 VW95
Ireland
TEL: +353 (0) 1 4373653
www.pneutrol.com/industrialspares

160 Series

Back Connecting Sockets

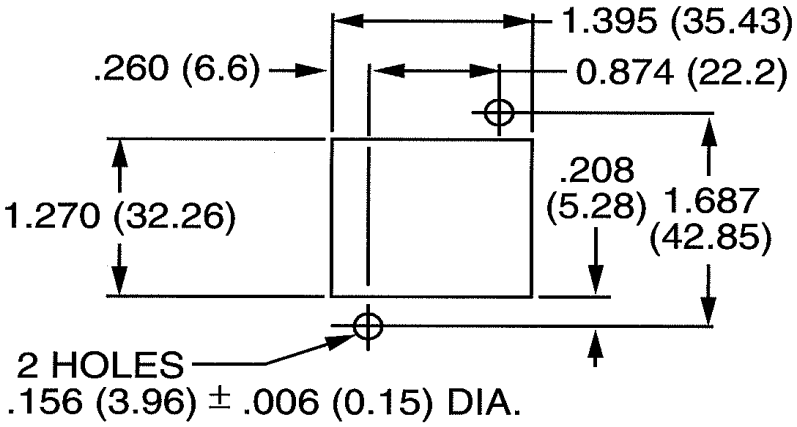

Tab Type Mounting

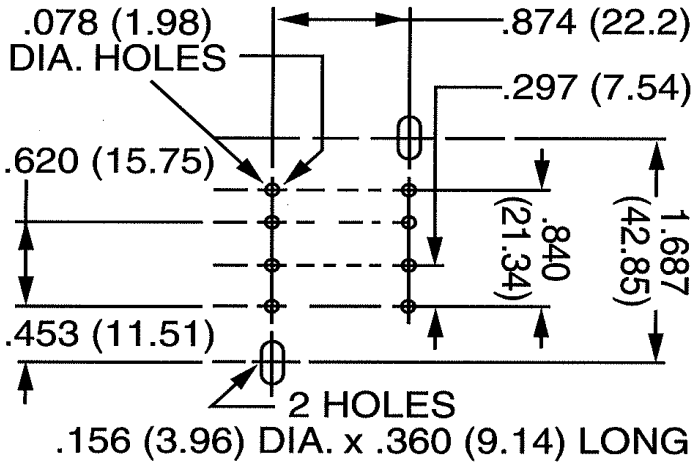

PC Mounting

Part Number	Rating	Configuration	Description
20312-80	10 Amps at 300 VAC	SPDT	160 SERIES SOLDER TYPE
20312-81*		DPDT	160 SERIES SOLDER TYPE
20312-82*		3PDT	160 SERIES SOLDER TYPE

- Surface Mount - Back Connect
- Accepts .187" Terminals
- UL Recognized File #E66240
- CSA Certified File LR29513M36

Part Number	Rating	Configuration	Description
20313-80	10 Amps at 300 VAC	SPDT	160 SERIES .187" QUICK CONNECT TYPE
20313-81		DPDT	160 SERIES .187" QUICK CONNECT TYPE
20313-82*		3PDT	160 SERIES .187" QUICK CONNECT TYPE

- Surface Mount - Back Connect
- Accepts .187" Terminals
- UL Recognized File #E66240
- CSA Certified File LR29513M36

Pneutrol International Limited

UK Office
5 Caulside Drive, Antrim, BT41 2DU
United Kingdom
TEL: +44 (0) 28 9448 1800
www.pneutrol.com/industrialspares

sales@pneutrol.com

European Office
Unit 6, Saint Anthony's Business Park, Ballymount Road, D22 VW95
Ireland
TEL: +353 (0) 1 4373653
www.pneutrol.com/industrialspares

160 Series

Sockets

Part Number	Rating	Configuration	Description
20314-80	10 Amps at 300 VAC	SPDT	160 SERIES PRINTED CIRCUIT TYPE
20314-81		DPDT	160 SERIES PRINTED CIRCUIT TYPE
20314-82*		3PDT	160 SERIES PRINTED CIRCUIT TYPE

- Surface Mount - Back Connect
- Accepts .187" Terminals
- UL Recognized File #E66240
- CSA Certified File LR29513M36

Part Number	Rating	Configuration	Description
20395-80	10 Amps at 300 VAC	SPDT	160 SERIES DEEP BARRIER TYPE WITH .187" Q.C.
20395-81		DPDT	160 SERIES DEEP BARRIER TYPE WITH .187" Q.C.
20395-82		3PDT	160 SERIES DEEP BARRIER TYPE WITH .187" Q.C.

- Surface Mount - Back Connect
- Accepts .187" Terminals
- UL Recognized File #E66240
- CSA Certified File LR29513M36

Hold Down Springs

Part Number	Description
20902-03*	Din Rail/Surface Mount Hold Down Spring
20902-00*	Back Connecting Hold Down Spring

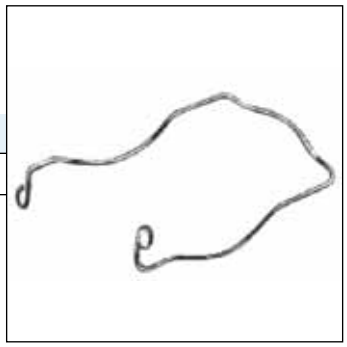

Pneutrol International Limited

UK Office
5 Caulside Drive, Antrim, BT41 2DU
United Kingdom
TEL: +44 (0) 28 9448 1800
www.pneutrol.com/industrialspares

sales@pneutrol.com

European Office
Unit 6, Saint Anthony's Business Park, Ballymount Road, D22 VW95
Ireland
TEL: +353 (0) 1 4373653
www.pneutrol.com/industrialspares