DSV-080-34M

Four-Way, Three-Position, Motor Center
Spool-Type Solenoid Valve

Deltrol FLUID PRODUCTS

SERIES 8

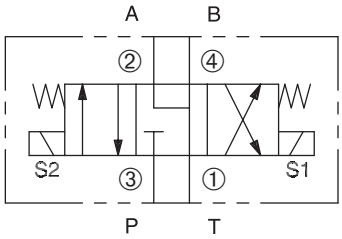

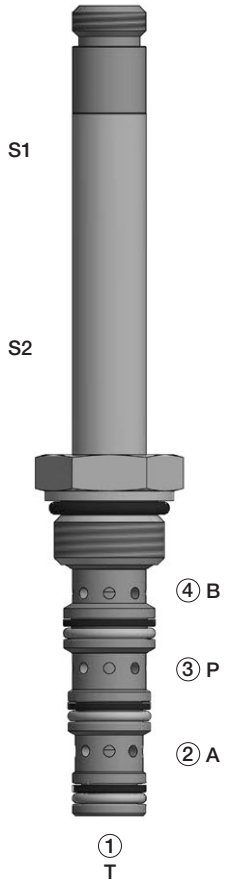

PRESSURE DROP VS. FLOW

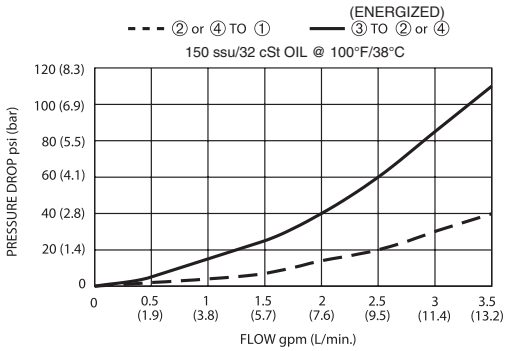

DESCRIPTION

A cartridge valve designed as a three position, four-way solenoid valve.

OPERATION

When de-energized, the valve allows flow between the ①, ②, and ④ ports with the ③ port blocked. When the upper solenoid (S1) is energized, the valve allows flow between ② and ① ports and the ③ and ④ ports. When the lower solenoid (S2) is energized, the valve allows flow between the ④ and ① ports and the ③ and ② ports.

Operation of Manual Override Option: To override, pull the knurled knob to activate the coil “S1” function, or push the knurled knob to activate the coil “S2” function. Release the knurled knob to return the center position.

FEATURES and BENEFITS

- Continuous-duty solenoid.
- Hardened precision spool and sleeve for long life.
- Efficient wet-armature construction.
- Cartridges are voltage interchangeable.
- Optional coil voltages and terminations.
- Industry common cavity.

SPECIFICATIONS

Operating Pressure: 3000 PSI (207 Bar)
Flow: See PRESSURE DROP VS. FLOW CURVE.
Nominal flow 3 gpm (11.4 L/min.)
Internal Leakage: (Per land) 10 cu. in./min. max. (164 cc/min.) at 3000 PSI (207 Bar)
Temperature: -30°F to +250°F (-35°C to +120°C)
Coil Rating: Continuous from 85% to 110% of rated voltage.
Current Draw: 12 VDC is 1.3 amps.
Minimum Pull-In Voltage: 85% of rated voltage at 3000 PSI (207 Bar)
Recommended Filtration: ISO 17/15/13
Fluids: Mineral-based fluids. For other fluid compatibility, consult factory.
Cavity/Cavity Tool: 080-4, see page 11.08.4
In-Line Body Material: Anodized 6061T6 aluminum alloy rated at 3000 PSI (207 Bar)

DSV-080-34M

Four-Way, Three-Position, Motor Center
Spool-Type Solenoid Valve

SERIES 8

DIMENSIONS Inches [Millimeters]

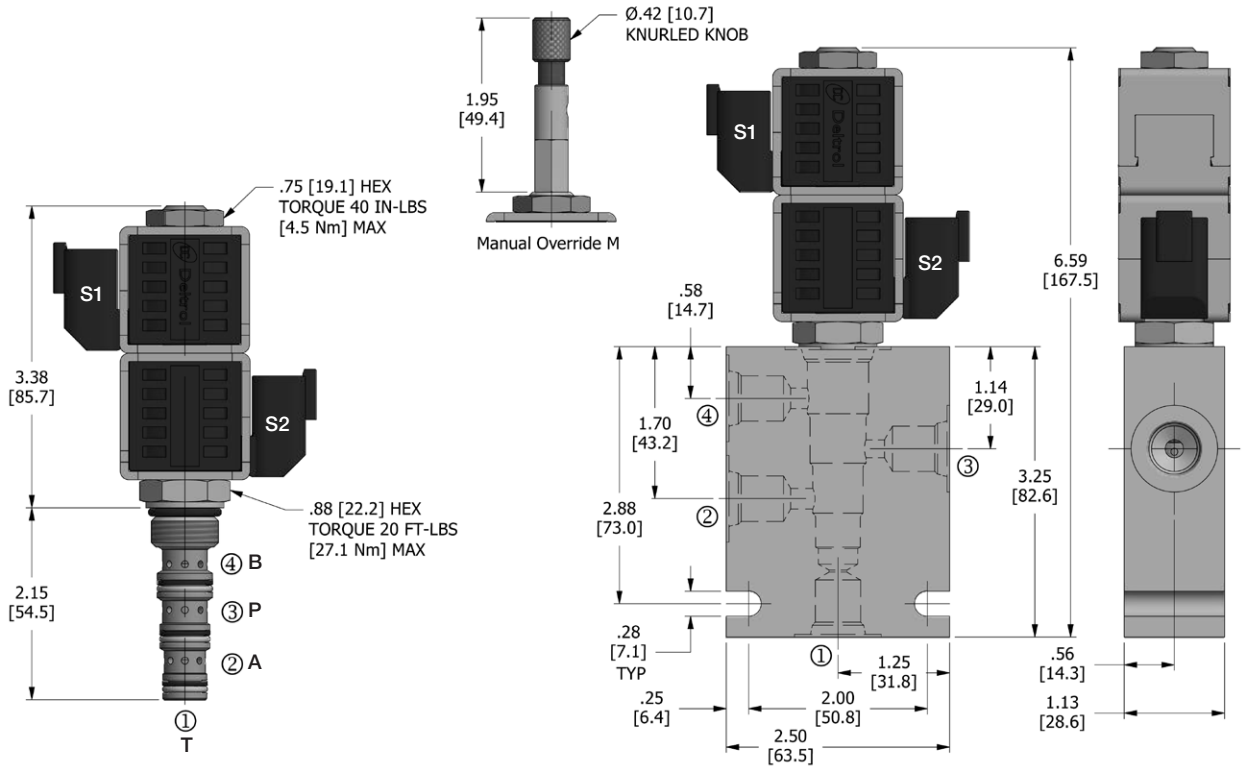

HOW TO ORDER

DSV	-	080	-	34 M	-	*	-	*	-	**	**	-	**
Solenoid Valve		Cavity		Flow Path / Motor Center		Seals		Manual Override		Voltage	Termination		Porting

Seals		Seal Kit
N	Buna N	DSK-080-34-U-A
V	Viton	

Manual Override	
omit	No manual override
M	Manual override

Voltage†	
omit	Cartridge only w/nut
D1	DC 12 Volt
D2	DC 24 Volt
D9	DC 20 Volt
D10	DC 10 Volt
A5	AC 120 Volt
A6	AC 240 Volt

Termination†	
omit	Cartridge only w/nut
DE	Double Lead
SE	Single Lead
HS	Hirschmann®
CS	Conduit
BE	Double Spade
EE	Single Stud
UE	Deutsch
PE	Metri-Pack
JE	Amp Junior Timer

Porting†		In-Line Body w/o Cartridge
omit	Cartridge only w/nut	
2N	1/4 PTF	B-080-4-2N
3N	3/8 PTF	B-080-4-3N
4T	SAE 4	B-080-4-4T
6T	SAE 6	B-080-4-6T

† Other options available – consult factory

All variations may not be configurable. Minimum order quantities may be required on other models. Contact Deltrol Fluid Products for complete details.